GAISER TOOL COMPANY
High Precision Micro Tools Since 1967

PGE-DASH NUMBER-DUS FOR THE HUGHES WELDER

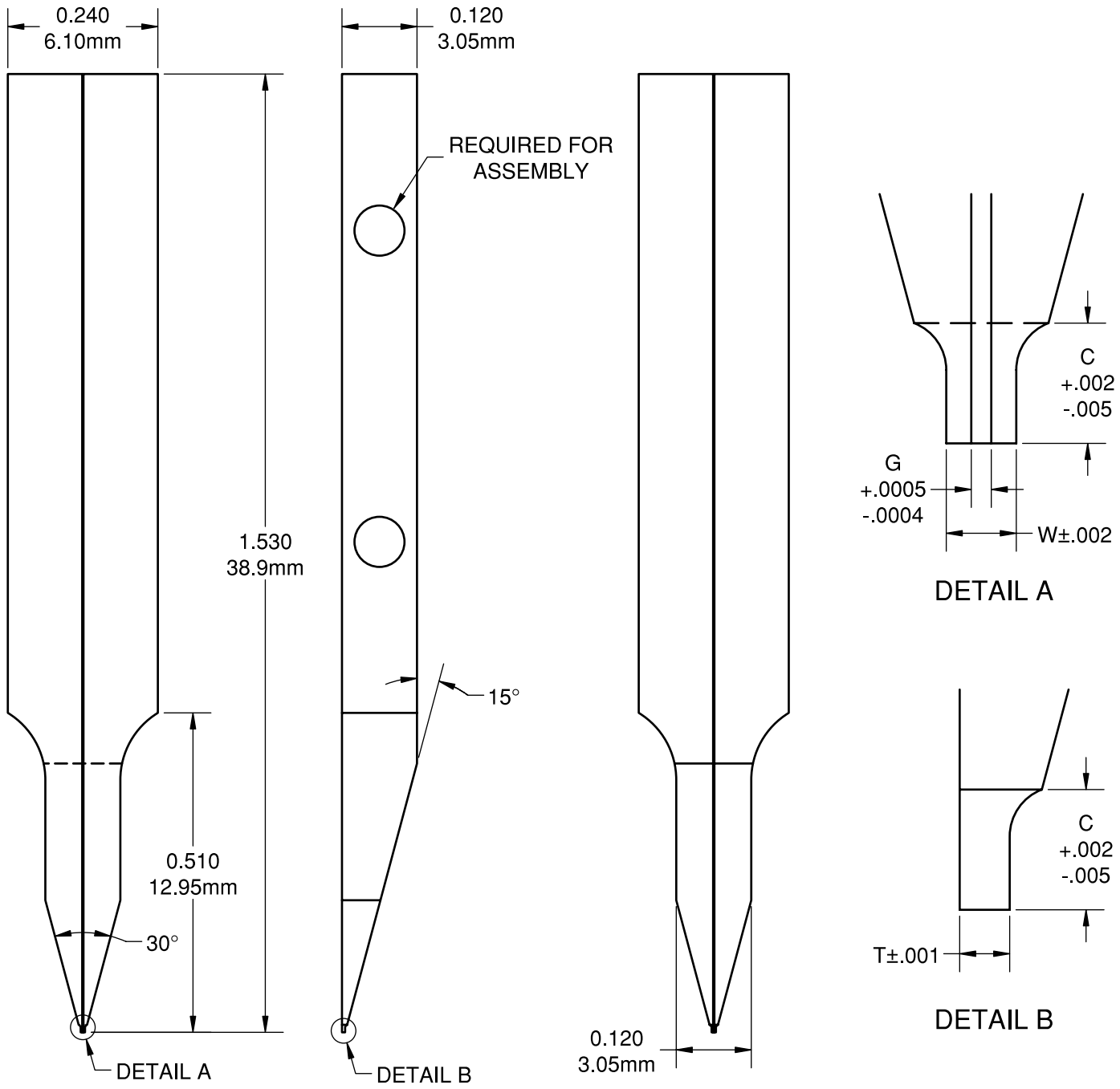

DASH NUMBER	W	T	G	C
-07052	.007	.005	.0020	.012
-10102	.010	.010	.0020	.020
-15203	.015	.020	.0030	.040
-20203	.020	.020	.0030	.040

Dimensions in inches unless otherwise specified

Material:
Molybdenum

Specify: Parallel Gap Electrode - Dash Number - Style
Example:
PGE-07052-DUS

4544 McGrath Street . Ventura, CA 93003 . 805.644.5583 . Fax 805.644.2013 . www.gaisertool.com . info@gaisertool.com

GAISER TOOL COMPANY
High Precision Micro Tools Since 1967

PGE-DASH NUMBER-ESQ FOR THE HUGHES WELDER

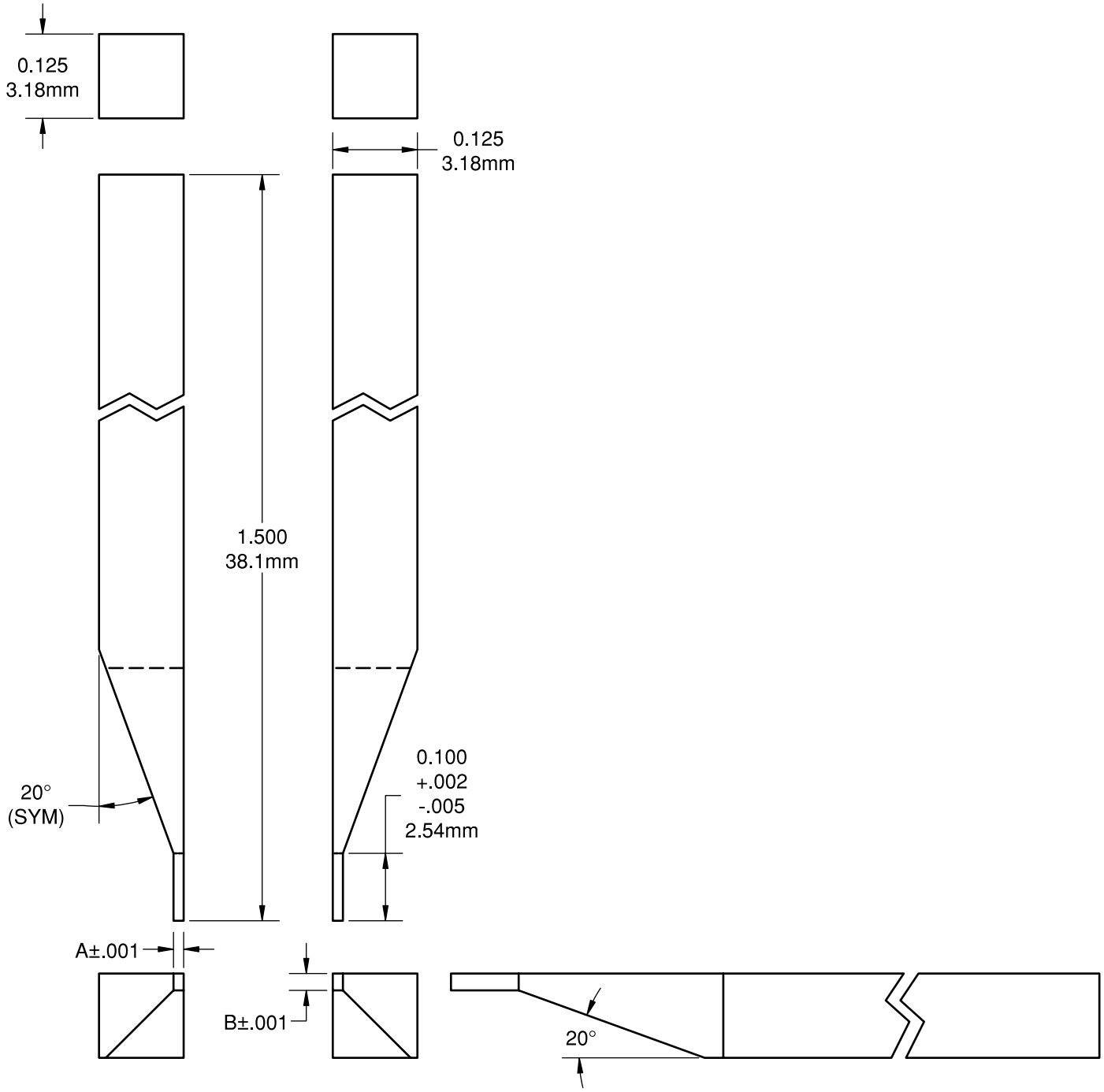

Material:

Molybdenum Standard
RWMA Class 2 Optional (Specify "-CU2" in part number)
Tungsten Optional (Specify "-W" in part number)

Note: Part is a mirror image pair as shown

Specify: Parallel Gap Electrode - Dash Number - Style - Optional Material
Example:
PGE-1015-ESQ
PGE-2545-ESQ-W

DASH NUMBER	A	B
-0815	.008	.015
-1015	.010	.015
-1525	.015	.025
-1825	.018	.025
-2323	.023	.023
-2545	.025	.045

Dimensions in inches unless otherwise specified

4544 McGrath Street . Ventura, CA 93003 . 805.644.5583 . Fax 805.644.2013 . www.gaisertool.com . info@gaisertool.com

GAISER TOOL COMPANY
High Precision Micro Tools Since 1967

PGE-DASH NUMBER-ESQA FOR THE HUGHES WELDER

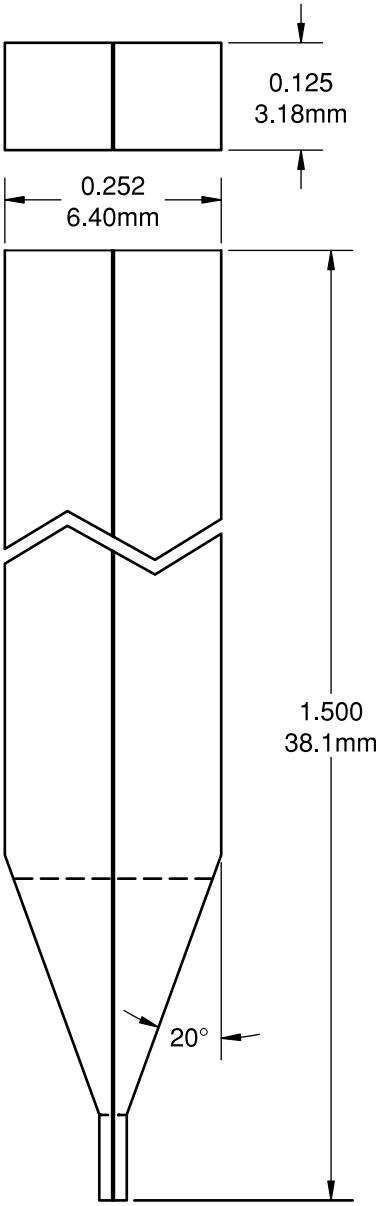

Features:

The PGE-Dash Number-ESQA series is a fixed-gap assembled version of the conventional two piece design. The gap may be specified at 0.002 inch or 0.004 inch. Gaiser Tool Company's exclusive long life insulator is used to separate the electrodes.

Material:

Molybdenum

Specify: Parallel Gap Electrode - Dash Number - Style
Example:
PGE-32252-ESQA

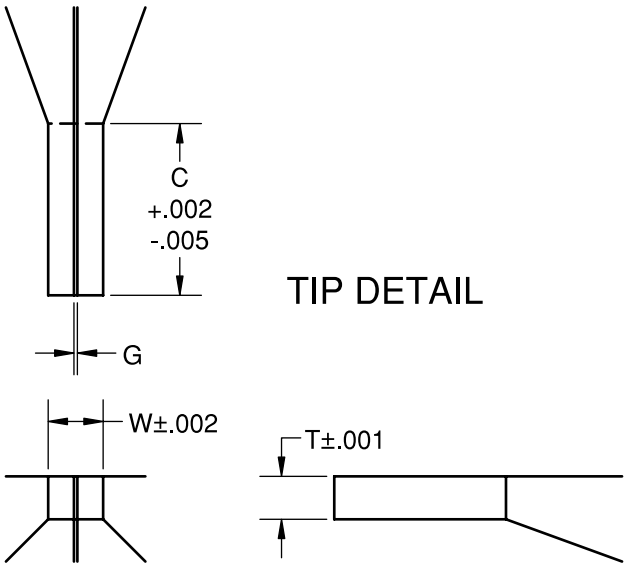

TIP DETAIL

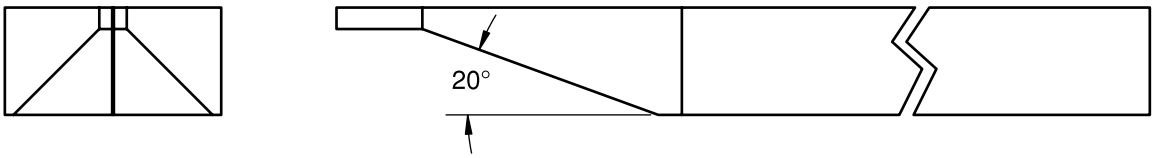

DASH NUMBER	W	T	G	C
-18152	.018	.015	.002	.100
-22152	.022	.015	.002	.100
-32252	.032	.025	.002	.100
-38252	.038	.025	.002	.100
-48252	.048	.025	.002	.100
-52452	.052	.045	.002	.100

DASH NUMBER	W	T	G	C
-20154	.020	.015	.004	.100
-24154	.024	.015	.004	.100
-34254	.034	.025	.004	.100
-40254	.040	.025	.004	.100
-50254	.050	.025	.004	.100
-54454	.054	.045	.004	.100

Dimensions in inches unless otherwise specified

4544 McGrath Street . Ventura, CA 93003 . 805.644.5583 . Fax 805.644.2013 . www.gaisertool.com . info@gaisertool.com

GAISER TOOL COMPANY
High Precision Micro Tools Since 1967

PGE-DASH NUMBER-ESQ-20D FOR THE HUGHES WELDER

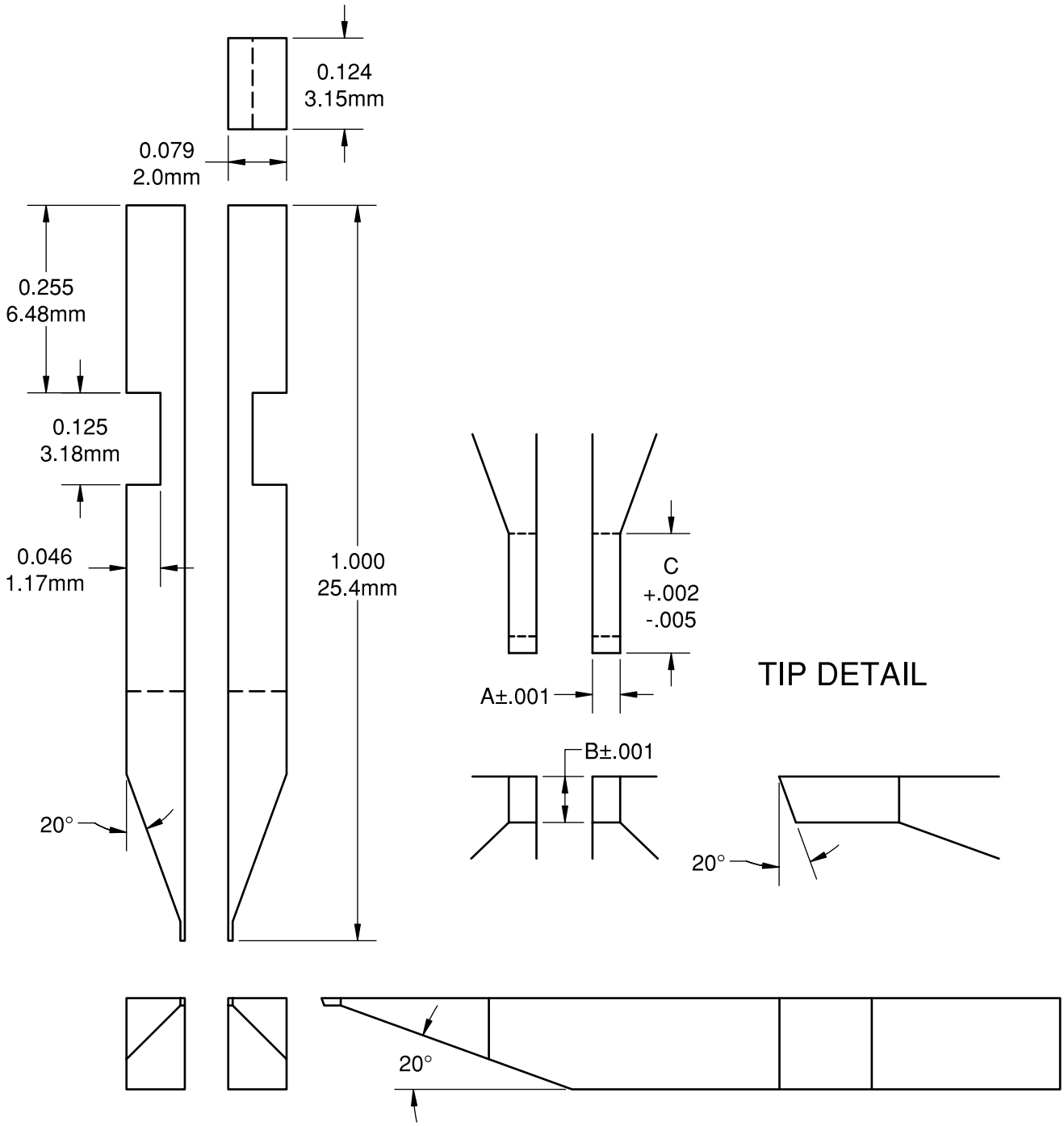

Material:

Molybdenum Standard
RWMA Class 2 Optional (Specify "-CU2" in part number)
Tungsten Optional (Specify "-W" in part number)

Note: Part is a mirror image pair as shown

Specify: Parallel Gap Electrode - Dash Number - Style - Optional Material
Example:
PGE-0610-ESQ-20D
PGE-1019-ESQ-20D-W

DASH NUMBER	A	B	C
-0205	.0025	.005	.017
-0408	.004	.008	.022
-0610	.006	.010	.026
-0815	.008	.015	.033
-1019	.010	.019	.039

Dimensions in inches unless otherwise specified

4544 McGrath Street . Ventura, CA 93003 . 805.644.5583 . Fax 805.644.2013 . www.gaisertool.com . info@gaisertool.com

GAISER TOOL COMPANY
High Precision Micro Tools Since 1967

PGE-DASH NUMBER-ESQA-20D FOR THE HUGHES WELDER

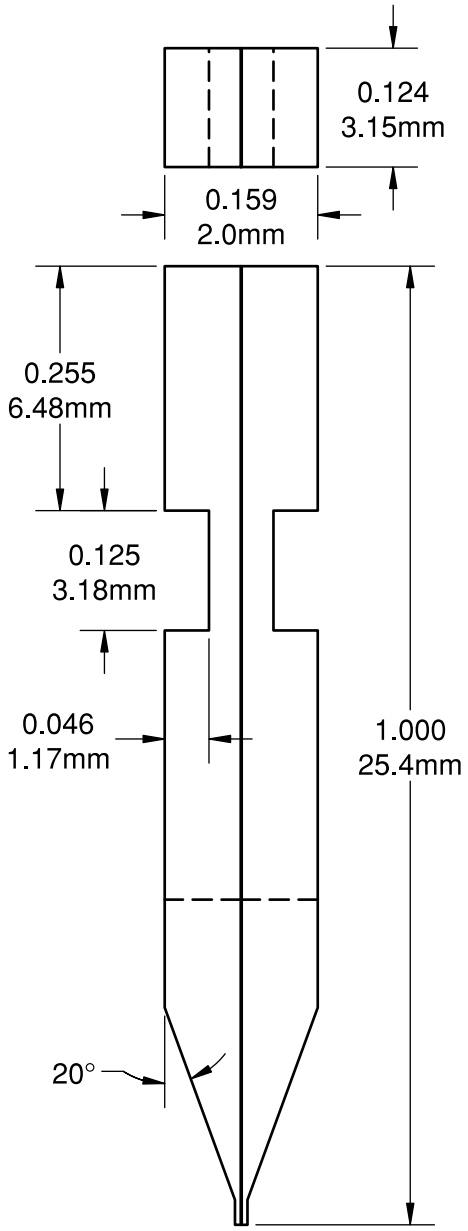

Features:

The PGE-Dash Number-ESQA-20D series is a fixed-gap assembled version of the conventional two piece design. The gap may be specified at 0.001 inch or 0.002 inch. Gaiser Tool Company's exclusive long life insulator is used to separate the electrodes.

Material:

Molybdenum

Specify: Parallel Gap Electrode - Dash Number - Style
Example:
PGE-14102-ESQA-20D

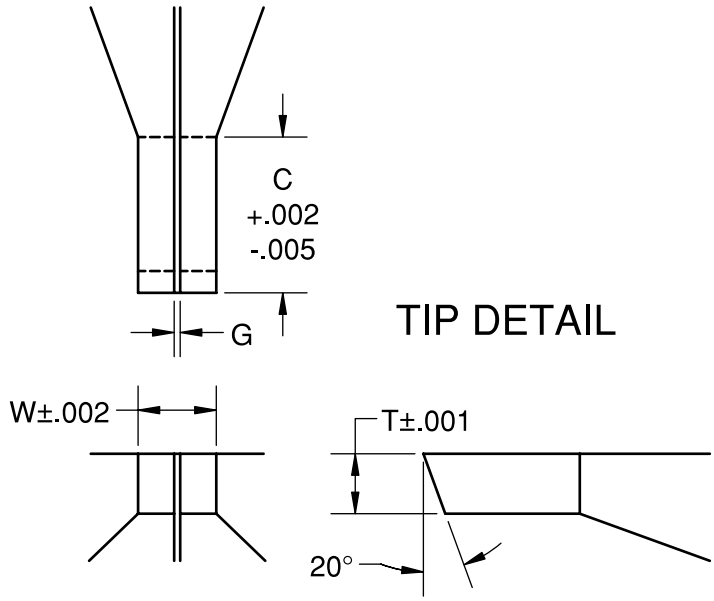

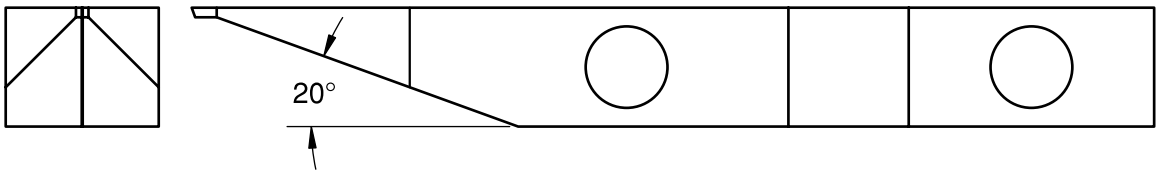

DASH NUMBER	W	T	G	C
-06051	.006	.005	.001	.017
-09081	.009	.008	.001	.022
-13101	.013	.010	.001	.026
-17151	.017	.015	.001	.033
-21191	.021	.019	.001	.039

DASH NUMBER	W	T	G	C
-07052	.007	.005	.002	.017
-10082	.010	.008	.002	.022
-14102	.014	.010	.002	.026
-18152	.018	.015	.002	.033
-22192	.022	.019	.002	.039

Dimensions in inches unless otherwise specified

4544 McGrath Street . Ventura, CA 93003 . 805.644.5583 . Fax 805.644.2013 . www.gaisertool.com . info@gaisertool.com

GAISER TOOL COMPANY
High Precision Micro Tools Since 1967

PGE-DASH NUMBER-DUO FOR THE HUGHES WELDER

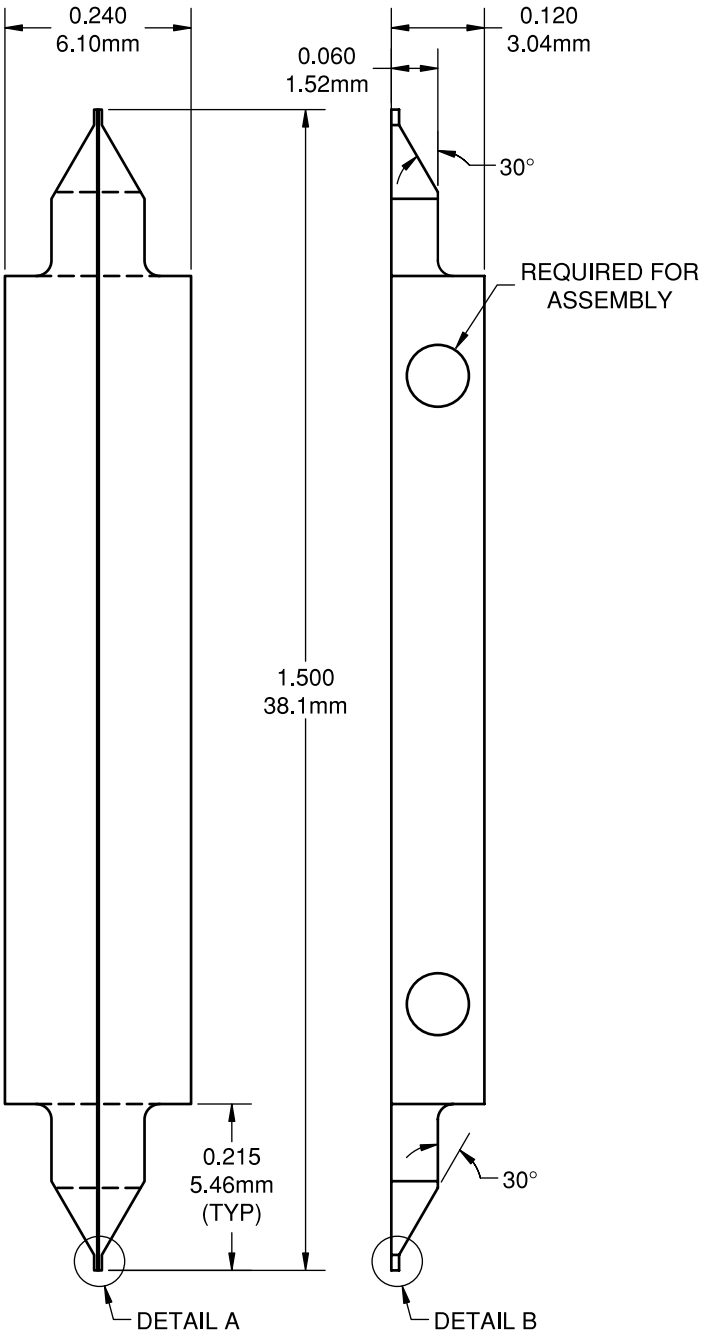

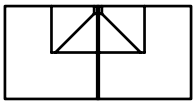

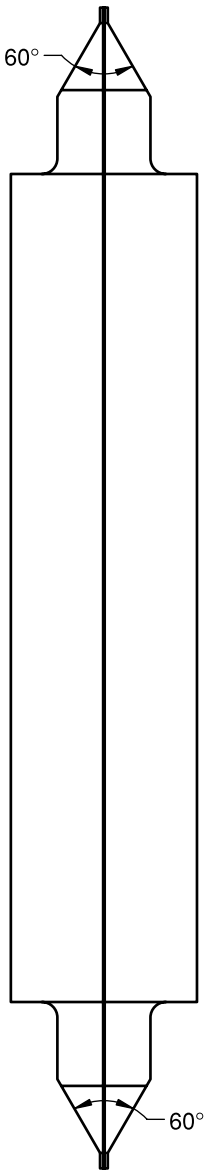

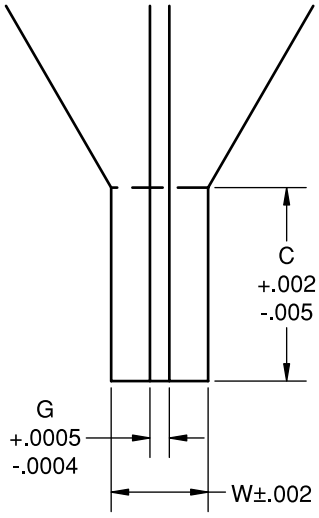

DETAIL A

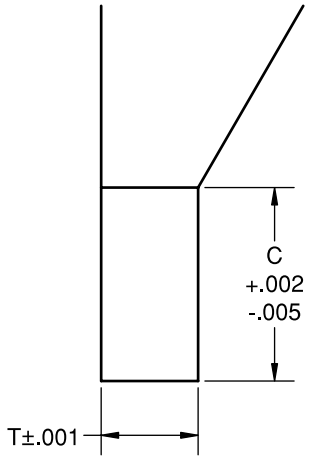

DETAIL B

Material:
Molybdenum

Specify: Parallel Gap Electrode - Dash Number - Style
Example:
PGE-10102-DUO

DASH NUMBER	W	T	G	C
-07052	.007	.005	.0020	.012
-10102	.010	.010	.0020	.020
-15203	.015	.020	.0030	.040
-33153	.033	.015	.0030	.060

Dimensions in inches unless otherwise specified

4544 McGrath Street . Ventura, CA 93003 . 805.644.5583 . Fax 805.644.2013 . www.gaisertool.com . info@gaisertool.com